## QUALITY STANDARD

- LST EN 1335-1:2000
- LST EN 1335-1:2000/AC:2003
- LST EN 1335-2:2009

## TECHNICAL INFORMATION

### Types

- Executive, task chairs.

### Seat

- Foam made of polyurethane.

### Back

- Frame made of black or white plastic;
- Upholstered with mesh.

### Lumbar support

- Height adjustable;
- Made of white or black plastic.

### Armrests

- Fixed black plastic armrests;
- Height adjustable black or white plastic armrests;
- Height adjustable black plastic armrests with soft PU (polyurethane) pads.
- 2D (two directions) adjustable polished aluminium armrests. Upper part coated with a PU (polyurethane) pads, soft touch. Adjustable in height, top moving forward and backward.

### Mechanism

- Epron: mechanism with synchronized movement of seat and back, 5 locking positions of the backrest, hand wheel tension adjustment;
- Epron Plus: synchronized mechanism, 5 locking positions of the backrest, tension adjustment with quick side tension regulation by lever.

### Gas lift

- Chromed or black colour;
- 120 mm run range.

### Bases

- Five-star polished aluminium, black plastic with fiberglass;
- External Ø680 mm.

### Castors

- Rubber free wheel castors for hard floor, Ø65 mm;
- PA (polyamide) free wheel castors for soft floor, Ø65 mm.

### Headrest

- Fixed;
- Made of soft polyurethane.

## MATERIALS

- Fabric: BONDAI, XTREME PLUS, VELITO, BERTA, ERA, SYNERGY, STEP/STEP Melange;
- Leather look: RNN;
- Mesh PM, GM.

## GUARANTEE

- 5 years

## RANGE

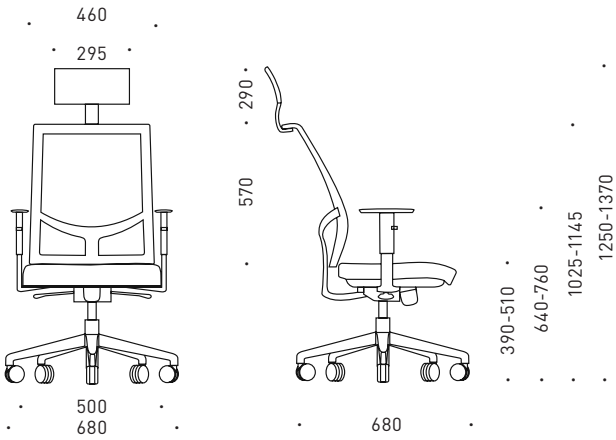


Executive

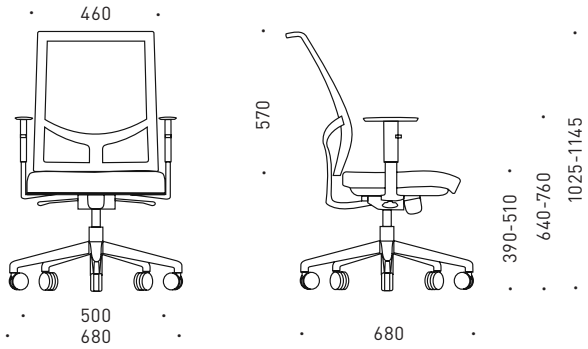


Task

## ORDERING EXAMPLE

### Code structure

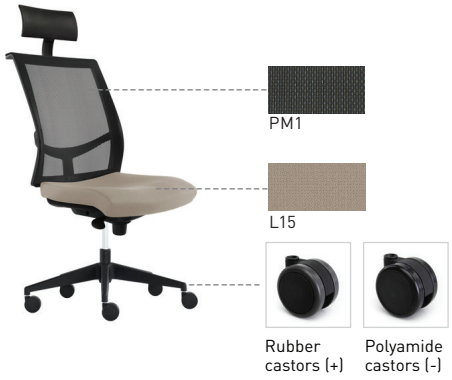


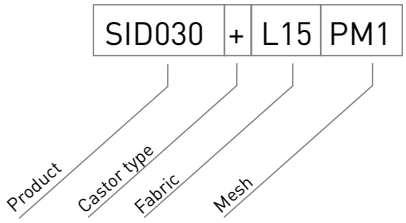


### Optional

Fixed black plastic armrests

Height adjustable white plastic armrests

Height adjustable black plastic armrests

Height adjustable armrests with soft PU pads

2D height adjustable armrests